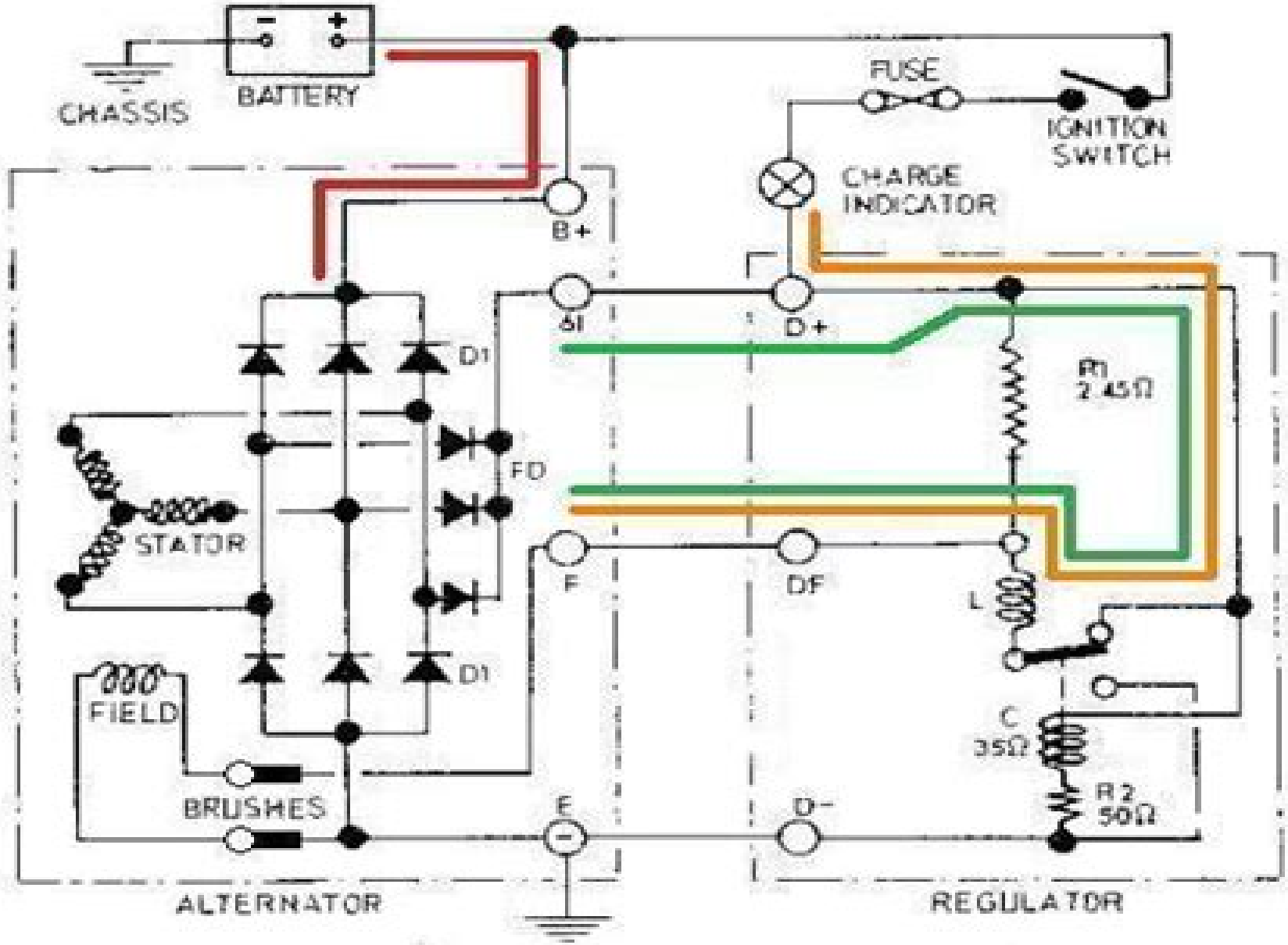

Bosch alternator and regulator circuit diagram. **SW-EM**

Bosch Alternator Circuit Diagram

Chilton Automotive Editorial Staff,Chilton Book Company

Bosch Alternator Circuit Diagram:

Hawkins Electrical Guide ... Nehemiah Hawkins,1917 *Automobile Electrical and Electronic Systems* Tom Denton,2017-09-12 This textbook will help you learn all the skills you need to pass all Vehicle Electrical and Electronic Systems courses and qualifications As electrical and electronic systems become increasingly more complex and fundamental to the workings of modern vehicles understanding these systems is essential for automotive technicians For students new to the subject this book will help to develop this knowledge but will also assist experienced technicians in keeping up with recent technological advances This new edition includes information on developments in pass through technology multiplexing and engine control systems In full colour and covering the latest course specifications this is the guide that no student enrolled on an automotive maintenance and repair course should be without Designed to make learning easier this book contains Photographs flow charts quick reference tables overview descriptions and step by step instructions Case studies to help you put the principles covered into a real life context Useful margin features throughout including definitions key facts and safety first considerations **Chilton's Import Car Repair Manual** Chilton Automotive Editorial Staff,Chilton Book Company,1979 This book includes repair information on cars and light trucks Includes specifications tune ups troubleshooting and diagnosis engine rebuilding emissions controls brakes transmissions and more *Hawkins Electrical Guide: Modern applications of electricity, reference index* Nehemiah Hawkins,1922 **Automotive Electrical and Electronic Systems** Richard K. DuPuy,Chek Chart,2000 The eight Chek Chart series books directly correlate to the ASE testing areas for certified automotive mechanics The entire series is job oriented especially designed for students who intend to work in the automotive service profession A student will be able to use the knowledge gained from these books and from the instructor to get and keep a job in automotive repair or maintenance Learning the material and techniques in these volumes is a giant leap toward a satisfying rewarding career **Automotive Handbook** Robert Bosch GmbH.,2004

Automotive Electrics and Electronics Horst Bauer,1999 3rd Edition As a result of rapid technological developments the use of electronic equipment in vehicles has increased immensely This book covers a wide variety of electric electronic systems and components ranging from alternators and starting systems to safety systems theft deterrence and navigation systems Automotive Electrics and Electronics provides comprehensive easy to understand descriptions as well as numerous charts drawings and illustrations This third edition features a new section on lighting technology and updated information on starter batteries alternators starting systems spark ignition engine management diesel engine management and electromagnetic compatibility Contents include Vehicle Electrical System and Circuit Diagrams Electromagnetic Compatibility EMC Starter Batteries Traction Batteries Alternators Starting Systems Lighting Technology Washing and cleaning Systems Theft deterrence systems Comfort and Convenience Systems Information Systems Occupant Safety Systems Driving Safety Systems Spark Ignition Engine Management Diesel Engine Management Comprehensive reference

that makes complex electronic issues easier to understand **Automotive Electrical and Electronic Systems with Shop Manual** Frank C. Derato,1994 Part of the Basic Automotive Series Automotive Electrical and Electronic Systems can be used in any introductory course in automotive electronics and electricity The text opens with up to date coverage of electricity magnetism and semi conductors Topics that follow include starting systems lighting systems power accessorties and the latest electronic systems including speed controls and new to this edition automotive micro computers Also new to this text are ignition and passive restraint systems The accompanying shop manual provides detailed coverage of specific repairs and service techniques using step by step procedures The text and its correlated shop manual help prepare students for Automotive Service Excellence ASE certification it also provides end of chapter questions that use a format similar to the ASE tests The contents of both volumes are based on the competencies and standards set by the National Institute for Automotive Service Excellence 1984 Domestic Cars Tune-up, Mechanical, Service & Repair Mitchell Manuals, inc,1984 *The Automobile Engineer* ,1964 Saab 900, 16 Valve Official Service Manual, 1985-1993 Bentley,Bentley Publishers,1993 These official Saab manuals are the only factory authorized comprehensive single source of service information and specifications available Whether you re a professional technician or a do it yourselfer these manuals will help you understand care for and repair your Saab Everything from fundamental automotive concepts and maintenance procedures to complex electrical system troubleshooting and complete engine overhaul is clearly explained Critical updates and information from the Saab Service Information Manual the Parts Service Information System and Saab Service Training have been included as well as fast proven repair procedures and tips used by Saab technicians *Automobile Engineer* ,1964 **Automobile Electronics and Basic Electrical Systems** Ken Layne,1989-10 **Glenn's Foreign Car Repair Manual** Harold T. Glenn,1963 Volkswagen Beetle, Super Beetle, Karmann Ghia Official Service Manual Volkswagen of America,1979 This Volkswagen Type 1 service manual covers Beetles Super Beetles VW Convertibles and Karmann Ghias for the model years 1970 through 1979 Page 4 of cover **The Motor Age** ,1919 **Motor Age** ,1920 **Automotive Electrical and Electronic Systems** Chek-Chart,1989-06 **Automotive Industries** ,1907 I & T Shop Service ,

When somebody should go to the books stores, search launch by shop, shelf by shelf, it is essentially problematic. This is why we offer the book compilations in this website. It will no question ease you to see guide **Bosch Alternator Circuit Diagram** as you such as.

By searching the title, publisher, or authors of guide you really want, you can discover them rapidly. In the house, workplace, or perhaps in your method can be every best place within net connections. If you try to download and install the Bosch Alternator Circuit Diagram, it is unquestionably simple then, since currently we extend the join to buy and create bargains to download and install Bosch Alternator Circuit Diagram consequently simple!

https://new.webyeshiva.org/files/detail/fetch.php/Alfreds_Basic_Piano_Library_Lesson_Book_Bk_2.pdf

Table of Contents Bosch Alternator Circuit Diagram

1. Understanding the eBook Bosch Alternator Circuit Diagram
    - The Rise of Digital Reading Bosch Alternator Circuit Diagram
    - Advantages of eBooks Over Traditional Books
2. Identifying Bosch Alternator Circuit Diagram
    - Exploring Different Genres
    - Considering Fiction vs. Non-Fiction
    - Determining Your Reading Goals
3. Choosing the Right eBook Platform
    - Popular eBook Platforms
    - Features to Look for in an Bosch Alternator Circuit Diagram
    - User-Friendly Interface
4. Exploring eBook Recommendations from Bosch Alternator Circuit Diagram
    - Personalized Recommendations
    - Bosch Alternator Circuit Diagram User Reviews and Ratings
    - Bosch Alternator Circuit Diagram and Bestseller Lists

5. Accessing Bosch Alternator Circuit Diagram Free and Paid eBooks
    - Bosch Alternator Circuit Diagram Public Domain eBooks
    - Bosch Alternator Circuit Diagram eBook Subscription Services
    - Bosch Alternator Circuit Diagram Budget-Friendly Options
6. Navigating Bosch Alternator Circuit Diagram eBook Formats
    - ePub, PDF, MOBI, and More
    - Bosch Alternator Circuit Diagram Compatibility with Devices
    - Bosch Alternator Circuit Diagram Enhanced eBook Features
7. Enhancing Your Reading Experience
    - Adjustable Fonts and Text Sizes of Bosch Alternator Circuit Diagram
    - Highlighting and Note-Taking Bosch Alternator Circuit Diagram
    - Interactive Elements Bosch Alternator Circuit Diagram
8. Staying Engaged with Bosch Alternator Circuit Diagram
    - Joining Online Reading Communities
    - Participating in Virtual Book Clubs
    - Following Authors and Publishers Bosch Alternator Circuit Diagram
9. Balancing eBooks and Physical Books Bosch Alternator Circuit Diagram
    - Benefits of a Digital Library
    - Creating a Diverse Reading Collection Bosch Alternator Circuit Diagram
10. Overcoming Reading Challenges
    - Dealing with Digital Eye Strain
    - Minimizing Distractions
    - Managing Screen Time
11. Cultivating a Reading Routine Bosch Alternator Circuit Diagram
    - Setting Reading Goals Bosch Alternator Circuit Diagram
    - Carving Out Dedicated Reading Time
12. Sourcing Reliable Information of Bosch Alternator Circuit Diagram
    - Fact-Checking eBook Content of Bosch Alternator Circuit Diagram
    - Distinguishing Credible Sources
13. Promoting Lifelong Learning

    - Utilizing eBooks for Skill Development
    - Exploring Educational eBooks
14. Embracing eBook Trends
    - Integration of Multimedia Elements
    - Interactive and Gamified eBooks

Bosch Alternator Circuit Diagram Introduction

Free PDF Books and Manuals for Download: Unlocking Knowledge at Your Fingertips In todays fast-paced digital age, obtaining valuable knowledge has become easier than ever. Thanks to the internet, a vast array of books and manuals are now available for free download in PDF format. Whether you are a student, professional, or simply an avid reader, this treasure trove of downloadable resources offers a wealth of information, conveniently accessible anytime, anywhere. The advent of online libraries and platforms dedicated to sharing knowledge has revolutionized the way we consume information. No longer confined to physical libraries or bookstores, readers can now access an extensive collection of digital books and manuals with just a few clicks. These resources, available in PDF, Microsoft Word, and PowerPoint formats, cater to a wide range of interests, including literature, technology, science, history, and much more. One notable platform where you can explore and download free Bosch Alternator Circuit Diagram PDF books and manuals is the internets largest free library. Hosted online, this catalog compiles a vast assortment of documents, making it a veritable goldmine of knowledge. With its easy-to-use website interface and customizable PDF generator, this platform offers a user-friendly experience, allowing individuals to effortlessly navigate and access the information they seek. The availability of free PDF books and manuals on this platform demonstrates its commitment to democratizing education and empowering individuals with the tools needed to succeed in their chosen fields. It allows anyone, regardless of their background or financial limitations, to expand their horizons and gain insights from experts in various disciplines. One of the most significant advantages of downloading PDF books and manuals lies in their portability. Unlike physical copies, digital books can be stored and carried on a single device, such as a tablet or smartphone, saving valuable space and weight. This convenience makes it possible for readers to have their entire library at their fingertips, whether they are commuting, traveling, or simply enjoying a lazy afternoon at home. Additionally, digital files are easily searchable, enabling readers to locate specific information within seconds. With a few keystrokes, users can search for keywords, topics, or phrases, making research and finding relevant information a breeze. This efficiency saves time and effort, streamlining the learning process and allowing individuals to focus on extracting the information they need. Furthermore, the availability of free PDF books and manuals fosters a culture of continuous learning. By removing financial barriers, more people can access educational resources and pursue lifelong learning, contributing to

personal growth and professional development. This democratization of knowledge promotes intellectual curiosity and empowers individuals to become lifelong learners, promoting progress and innovation in various fields. It is worth noting that while accessing free Bosch Alternator Circuit Diagram PDF books and manuals is convenient and cost-effective, it is vital to respect copyright laws and intellectual property rights. Platforms offering free downloads often operate within legal boundaries, ensuring that the materials they provide are either in the public domain or authorized for distribution. By adhering to copyright laws, users can enjoy the benefits of free access to knowledge while supporting the authors and publishers who make these resources available. In conclusion, the availability of Bosch Alternator Circuit Diagram free PDF books and manuals for download has revolutionized the way we access and consume knowledge. With just a few clicks, individuals can explore a vast collection of resources across different disciplines, all free of charge. This accessibility empowers individuals to become lifelong learners, contributing to personal growth, professional development, and the advancement of society as a whole. So why not unlock a world of knowledge today? Start exploring the vast sea of free PDF books and manuals waiting to be discovered right at your fingertips.

FAQs About Bosch Alternator Circuit Diagram Books

What is a Bosch Alternator Circuit Diagram PDF? A PDF (Portable Document Format) is a file format developed by Adobe that preserves the layout and formatting of a document, regardless of the software, hardware, or operating system used to view or print it. **How do I create a Bosch Alternator Circuit Diagram PDF?** There are several ways to create a PDF: Use software like Adobe Acrobat, Microsoft Word, or Google Docs, which often have built-in PDF creation tools. Print to PDF: Many applications and operating systems have a "Print to PDF" option that allows you to save a document as a PDF file instead of printing it on paper. Online converters: There are various online tools that can convert different file types to PDF. **How do I edit a Bosch Alternator Circuit Diagram PDF?** Editing a PDF can be done with software like Adobe Acrobat, which allows direct editing of text, images, and other elements within the PDF. Some free tools, like PDFescape or Smallpdf, also offer basic editing capabilities. **How do I convert a Bosch Alternator Circuit Diagram PDF to another file format?** There are multiple ways to convert a PDF to another format: Use online converters like Smallpdf, Zamzar, or Adobe Acrobats export feature to convert PDFs to formats like Word, Excel, JPEG, etc. Software like Adobe Acrobat, Microsoft Word, or other PDF editors may have options to export or save PDFs in different formats. **How do I password-protect a Bosch Alternator Circuit Diagram PDF?** Most PDF editing software allows you to add password protection. In Adobe Acrobat, for instance, you can go to "File" -> "Properties" -> "Security" to set a password to restrict access or editing capabilities. Are there any free alternatives to Adobe Acrobat for working with PDFs? Yes, there are many free alternatives for working with PDFs, such

as: LibreOffice: Offers PDF editing features. PDFsam: Allows splitting, merging, and editing PDFs. Foxit Reader: Provides basic PDF viewing and editing capabilities. How do I compress a PDF file? You can use online tools like Smallpdf, ILovePDF, or desktop software like Adobe Acrobat to compress PDF files without significant quality loss. Compression reduces the file size, making it easier to share and download. Can I fill out forms in a PDF file? Yes, most PDF viewers/editors like Adobe Acrobat, Preview (on Mac), or various online tools allow you to fill out forms in PDF files by selecting text fields and entering information. Are there any restrictions when working with PDFs? Some PDFs might have restrictions set by their creator, such as password protection, editing restrictions, or print restrictions. Breaking these restrictions might require specific software or tools, which may or may not be legal depending on the circumstances and local laws.

Find Bosch Alternator Circuit Diagram :

alfreds basic piano library lesson book bk 2
alfredo a man to love a man to hate
alfa romeo 166 workshop manual torrent
alfa romeo alfetta 1973 to 1987 workshop manual
~~alerton air conditioning manual~~
alfa romeo 159 maintenance manual
alfa romeo manual mito
~~alfreds basic piano library lesson book bk 1a book and cd~~
~~algebra 2 trig regents answers june 2013~~
alfa romeo 33 workshop manual instant
alfa romeo spider 939 service manual
alfa romeo gtv spider 916 1995 2006 full service manual
alfa romeo 156 manual gearbox
alex armstrong awakening
alfa spider 2004 owners manual

Bosch Alternator Circuit Diagram :

Spiritual Fatherhood: Evagrius Ponticus on the ... - Goodreads Spiritual Fatherhood: Evagrius Ponticus on the ... - Goodreads Spiritual Fatherhood: Evagrius Ponticus on the Role of ... Spiritual fatherhood is popular, controversial, and misunderstood.

For Evagrius Ponticus (AD 343-99) and the early fathers, nothing can be spiritual without ... Evagrius Ponticus on the Role of Spiritual Father - Gabriel ... He possesses a thorough knowledge of patristic literature, and is known worldwide for his writings on contemplative prayer. Two of his other studies on Evagrius ... Spiritual fatherhood : Evagrius Ponticus on the role of ... - IUCAT Title: Spiritual fatherhood : Evagrius Ponticus on the role of the spiritual father / Gabriel Bunge ; translated by Luis Joshua Salés. ; Format: Book ; Published ... Spiritual Fatherhood Evagrius - Not of This World Icons Spiritual Fatherhood. Evagrius Ponticus on the role of the Spiritual Father. By Gabriel Bunge. Softcover, 119 pages. Publisher: SVS Press, 2016. Evagrius Ponticus on the Role of the Spiritual Father Title, Spiritual Fatherhood: Evagrius Ponticus on the Role of the Spiritual Father ; Author, Gabriel Bunge ; Translated by, Luis Joshua Salés ; Publisher, St ... Evagrius Ponticus on the Role of Spiritual Father Synopsis: Spiritual fatherhood is popular, controversial, and misunderstood. For Evagrius Ponticus (AD 343-99) and the early fathers, nothing can be spiritual ... Author: BUNGE, GABRIEL Earthen Vessels: The Practice of Personal Prayer According to the Patristic Tradition · Spiritual Fatherhood: Evagrius Ponticus on the Role of Spiritual Father. Spiritual Fatherhood: Evagrius Ponticus on the Role of ... Spiritual Fatherhood: Evagrius Ponticus on the Role of Spiritual Father ; Quantity. 1 available ; Item Number. 134677559911 ; Narrative Type. Christian Books & ... Get PDF Spiritual Fatherhood: Evagrius Ponticus on the ... Stream Get PDF Spiritual Fatherhood: Evagrius Ponticus on the Role of Spiritual Father by Gabriel Bunge by Itsukihenryfatsaniube on desktop ... Cengage Advantage Books: American Government and ... New features, up-to-date political news and analysis, and a great price make AMERICAN GOVERNMENT AND POLITICS TODAY: BRIEF EDITION, 2014-2015 a top seller. BUNDLE (2) AMERICAN GOVERNMENT AND POLITICS ... New features, up-to-date political news and analysis, and a great price make AMERICAN GOVERNMENT AND POLITICS TODAY: BRIEF EDITION, 2014-2015 a top seller. American Government and Politics Today, Brief Edition, ... Praised for its balanced coverage, the book examines all the key concepts of American government, while providing exciting student-oriented features that focus ... American Government and Politics Today, 2014-2015 - ... New features, up-to-date political news and analysis, and a great price make AMERICAN GOVERNMENT AND POLITICS TODAY: BRIEF EDITION, 2014-2015 a top seller. American Government and Politics Today, Brief Edition ... American Government and Politics Today 2014–2015 Brief Edition Steffen W. Schmidt Iowa State University Mack C. Shelley II Iowa ... 9781285436388_00a_fm_0i ... American Government and Politics Today, Brief Edition ... American Government and Politics Today, Brief Edition, 2014-2015. Condition is "Good". Shipped with USPS Priority Mail. Final sale. American Government and Politics Today, Brief Edition ... Cengage Advantage Books: American Government and Politics Today, Brief Edition, 2014-2015 ebook (1 Year Access) Steffen W Schmidt | Get Textbooks American Government and Politics Today, Brief Edition, 2014-2015 (Book Only) ... American Government and Politics Today, Brief Edition, 2012-2013 by Steffen W ... Cengage Advantage Books: American Government and ... New features, up-to-date political news and analysis, and a great price make AMERICAN GOVERNMENT AND

POLITICS TODAY: BRIEF EDITION, 2014-2015 a top seller. Cengage Advantage Books: American Government and ... Cengage Advantage Books: American Government and Politics Today, Brief Edition, 2014-2015 (with CourseMate Printed Access Card). by Schmidt, Steffen W., ... Operations Management For Competitive Advantage With ... Access Operations Management for Competitive Advantage with Student DVD 11th Edition solutions now. Our solutions are written by Chegg experts so you can be ... Operations Management For Competitive Advantage 11th ... Operations Management For Competitive Advantage 11th Edition Solutions Manual OPERATIONS MANAGEMENT FOR COMPETITIVE ADVANTAGE 11TH EDITION SOLUTIONS MANUAL PDF. Operations Management For Competitive Advantage With ... Get instant access to our step-by-step Operations Management For Competitive Advantage With Student DVD solutions manual. Our solution manuals are written ... Operations Management for Competitive Advantage, 11e Operations Management For Competitive Advantage 11th Edition Solutions Manual OPERATIONS MANAGEMENT FOR COMPETITIVE ADVANTAGE 11TH EDITION SOLUTIONS MANUAL PDF. Operations Management Solution Manual | PDF operations management solution manual - Free download as Word Doc (.doc), PDF ... Operations Management For Competitive Advantage, Edition 11. Avinash As Avi. Operations Management Stevenson 11th Edition Solutions Operations Management Stevenson 11th Edition Solutions Manual Free PDF eBook Download: Operations Management ... Operations Management for Competitive Advantage, ... Solution Manual and Case Solutions For Strategic ... Solution Manual and Case Solutions for Strategic Management a Competitive Advantage Approach 14th Edition by David - Free download as PDF File (.pdf), ... Solutions Manual for Strategic Management and ... Mar 26, 2022 - Solutions Manual for Strategic Management and Competitive Advantage Concepts and Cases 2nd Edition by Barney Check more at ... Operations Management For Competitive Advantage Instructor's Solutions Manual to accompany Production and Operations Management / 0-07-239274-6 ... Product Design & Process Selection--Services; Technical Note 6 ... Test bank Solution Manual For Essentials of Strategic ... Solutions, Test Bank & Ebook for Essentials of Strategic Management: The Quest for Competitive Advantage 7th Edition By John Gamble and Margaret Peteraf ;