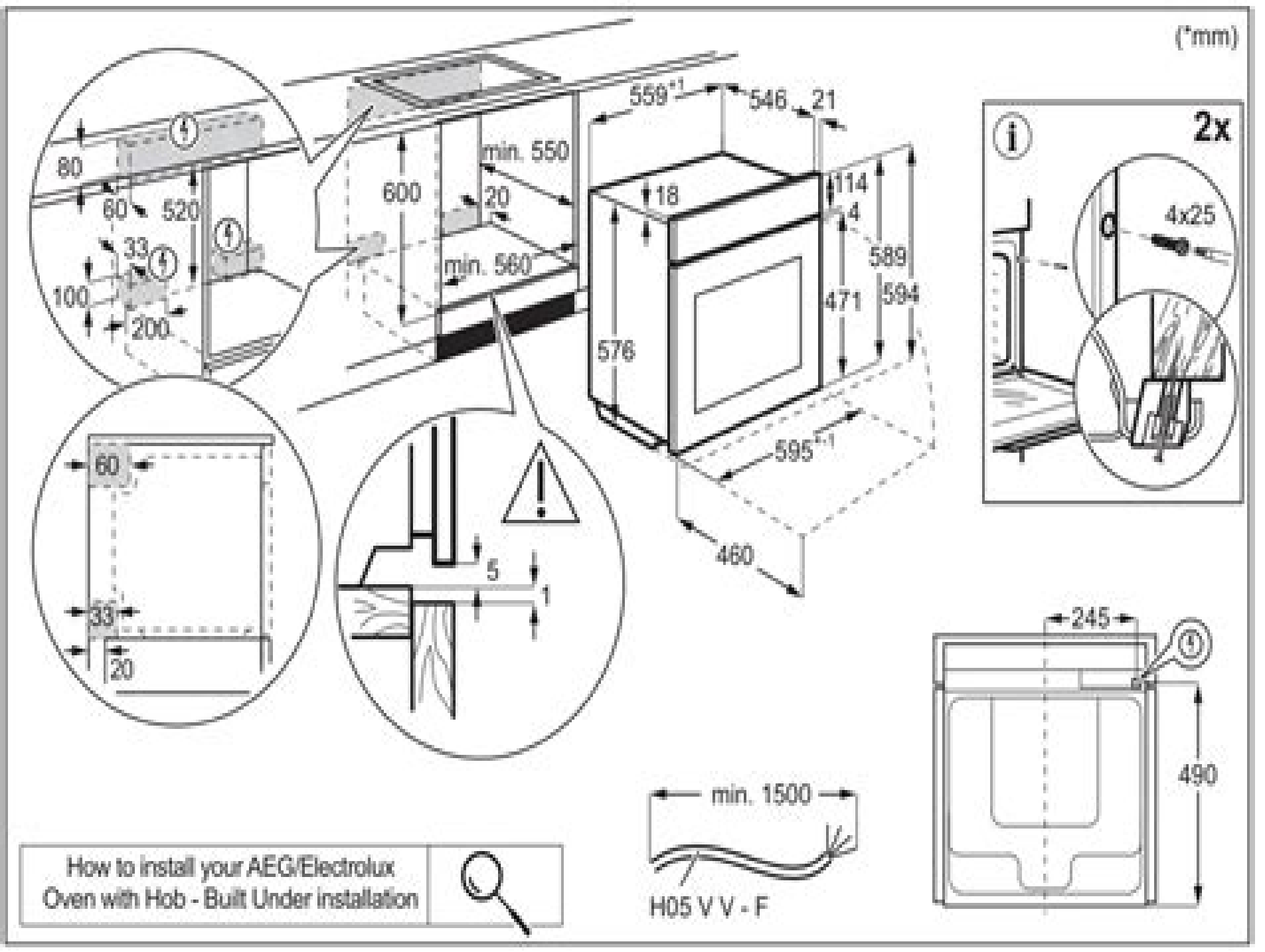
(*mm)
559*1
546
21
min. 550
600
20
min. 560
18
114
4
589
594
471
576
595*1
460
80
60
520
33
100
200
60
33
20
5
1
2x
4x25
245
490
min. 1500
H05 V V - F
How to install your AEG/Electrolux
Oven with Hob - Built Under installation

Aeg Appliance User Guide

Consumer Reports

Aeg Appliance User Guide:

Home Appliance Buying Guide ,1996 Home Appliance Buying Guide 1996 Edition Consumer Reports,1996 Rating more than 50 types of appliances including dishwashers microwaves washing machines and electric ranges this guide helps consumers cut through the advertising hype and find appliances that truly meet their needs It also provides maintenance repair and safety advice as well as tips on how to maximize energy efficiency **User Friendly** Cliff Kuang,Robert Fabricant,2019-11-19 AMAZON BEST BOOKS OF 2019 PICK FORTUNE WRITERS AND EDITORS RECOMMENDED BOOKS OF 2019 PICK User Friendly is a tour de force an engrossing fusion of scholarly research professional experience and revelations from intrepid firsthand reporting EDWARD TENNER The New York Times Book Review In User Friendly Cliff Kuang and Robert Fabricant reveal the untold story of a paradigm that quietly rules our modern lives the assumption that machines should anticipate what we need Spanning over a century of sweeping changes from women s rights to the Great Depression to World War II to the rise of the digital era this book unpacks the ways in which the world has been and continues to be remade according to the principles of the once obscure discipline of user experience design In this essential text Kuang and Fabricant map the hidden rules of the designed world and shed light on how those rules have caused our world to change an underappreciated but essential history that s pieced together for the first time Combining the expertise and insight of a leading journalist and a pioneering designer User Friendly provides a definitive thoughtful and practical perspective on a topic that has rapidly gone from arcane to urgent to inescapable In User Friendly Kuang and Fabricant tell the whole story for the first time and you ll never interact with technology the same way again Proceedings: Building equipment and appliances ,1990 **International Electronics Directory '90** C. G. Wedgwood,2013-10-22 International Electronics Directory 90 Third Edition The Guide to European Manufacturers Agents and Applications Part 1 comprises a directory of various manufacturers in Europe and a directory of agents in Europe This book contains a classified directory of electronic products and services where both manufacturers and agents are listed This edition is organized into two sections Section 1 provides details of manufacturers including number of employees production program names of managers as well as links with other companies The entries are listed alphabetically on a country by country basis Section 2 provides information concerning agents or representatives including names of manufacturers represented names of managers number of employees and range of products handled A number of these companies are also active in manufacturing and so appear in both Section 1 and Section 2 This book is a valuable resource for private consumers **Electronics Buyers' Guide** ,1980 **Federal Register** ,1984-10 *Electrical World* ,1927 **The Electrician** ,1903 **Brauwelt International** ,2008 *Monthly Record of Scientific Literature* ,1907 **Among Our Books** Carnegie Library of Pittsburgh,1913 **Monthly Bulletin of the Carnegie Library of Pittsburgh** Carnegie Library of Pittsburgh,1913 **The Electrical Review** ,1930 *The Engineering and Boiler House Review* ,1906 Pulp & Paper Canada Reference Manual & Buyers' Guide ,1979

Journal of the Society of Chemical Industry Society of Chemical Industry (Great Britain),1928 **Chemistry and Industry Review** ,1928 Marine Engineer and Motorship Builder ,1927 *State of the Art of Energy Efficiency* Edward L. Vine,Drury Crawley,1991 The buildings sector accounts for a major proportion of energy consumption currently around 20 per cent but it has also been the focus of much of the energy conservation efforts over the past decade This book provides a compilation of the state of the art regarding energy conservation Chapters examine a wide range of issues including design and implementation of government and utility programmes appliance standards collection and analysis of buildings energy data and integrated resource planning The book also discusses future directions for research

Unveiling the Energy of Verbal Art: An Mental Sojourn through **Aeg Appliance User Guide**

In a world inundated with screens and the cacophony of quick transmission, the profound energy and emotional resonance of verbal art often disappear into obscurity, eclipsed by the continuous onslaught of noise and distractions. However, located within the musical pages of **Aeg Appliance User Guide**, a interesting perform of literary beauty that impulses with raw emotions, lies an unique journey waiting to be embarked upon. Published by way of a virtuoso wordsmith, that mesmerizing opus books readers on a mental odyssey, softly exposing the latent potential and profound affect stuck within the complicated internet of language. Within the heart-wrenching expanse of the evocative evaluation, we will embark upon an introspective exploration of the book is central subjects, dissect its fascinating publishing style, and immerse ourselves in the indelible effect it leaves upon the depths of readers souls.

https://new.webyeshiva.org/files/publication/fetch.php/Algebra_In_15_Minutes_A_Day.pdf

Table of Contents Aeg Appliance User Guide

1. Understanding the eBook Aeg Appliance User Guide
    - The Rise of Digital Reading Aeg Appliance User Guide
    - Advantages of eBooks Over Traditional Books
2. Identifying Aeg Appliance User Guide
    - Exploring Different Genres
    - Considering Fiction vs. Non-Fiction
    - Determining Your Reading Goals
3. Choosing the Right eBook Platform
    - Popular eBook Platforms
    - Features to Look for in an Aeg Appliance User Guide
    - User-Friendly Interface
4. Exploring eBook Recommendations from Aeg Appliance User Guide
    - Personalized Recommendations

    - Aeg Appliance User Guide User Reviews and Ratings
    - Aeg Appliance User Guide and Bestseller Lists
5. Accessing Aeg Appliance User Guide Free and Paid eBooks
    - Aeg Appliance User Guide Public Domain eBooks
    - Aeg Appliance User Guide eBook Subscription Services
    - Aeg Appliance User Guide Budget-Friendly Options
6. Navigating Aeg Appliance User Guide eBook Formats
    - ePub, PDF, MOBI, and More
    - Aeg Appliance User Guide Compatibility with Devices
    - Aeg Appliance User Guide Enhanced eBook Features
7. Enhancing Your Reading Experience
    - Adjustable Fonts and Text Sizes of Aeg Appliance User Guide
    - Highlighting and Note-Taking Aeg Appliance User Guide
    - Interactive Elements Aeg Appliance User Guide
8. Staying Engaged with Aeg Appliance User Guide
    - Joining Online Reading Communities
    - Participating in Virtual Book Clubs
    - Following Authors and Publishers Aeg Appliance User Guide
9. Balancing eBooks and Physical Books Aeg Appliance User Guide
    - Benefits of a Digital Library
    - Creating a Diverse Reading Collection Aeg Appliance User Guide
10. Overcoming Reading Challenges
    - Dealing with Digital Eye Strain
    - Minimizing Distractions
    - Managing Screen Time
11. Cultivating a Reading Routine Aeg Appliance User Guide
    - Setting Reading Goals Aeg Appliance User Guide
    - Carving Out Dedicated Reading Time
12. Sourcing Reliable Information of Aeg Appliance User Guide
    - Fact-Checking eBook Content of Aeg Appliance User Guide

    - Distinguishing Credible Sources
13. Promoting Lifelong Learning
    - Utilizing eBooks for Skill Development
    - Exploring Educational eBooks
14. Embracing eBook Trends
    - Integration of Multimedia Elements
    - Interactive and Gamified eBooks

Aeg Appliance User Guide Introduction

In this digital age, the convenience of accessing information at our fingertips has become a necessity. Whether its research papers, eBooks, or user manuals, PDF files have become the preferred format for sharing and reading documents. However, the cost associated with purchasing PDF files can sometimes be a barrier for many individuals and organizations. Thankfully, there are numerous websites and platforms that allow users to download free PDF files legally. In this article, we will explore some of the best platforms to download free PDFs. One of the most popular platforms to download free PDF files is Project Gutenberg. This online library offers over 60,000 free eBooks that are in the public domain. From classic literature to historical documents, Project Gutenberg provides a wide range of PDF files that can be downloaded and enjoyed on various devices. The website is user-friendly and allows users to search for specific titles or browse through different categories. Another reliable platform for downloading Aeg Appliance User Guide free PDF files is Open Library. With its vast collection of over 1 million eBooks, Open Library has something for every reader. The website offers a seamless experience by providing options to borrow or download PDF files. Users simply need to create a free account to access this treasure trove of knowledge. Open Library also allows users to contribute by uploading and sharing their own PDF files, making it a collaborative platform for book enthusiasts. For those interested in academic resources, there are websites dedicated to providing free PDFs of research papers and scientific articles. One such website is Academia.edu, which allows researchers and scholars to share their work with a global audience. Users can download PDF files of research papers, theses, and dissertations covering a wide range of subjects. Academia.edu also provides a platform for discussions and networking within the academic community. When it comes to downloading Aeg Appliance User Guide free PDF files of magazines, brochures, and catalogs, Issuu is a popular choice. This digital publishing platform hosts a vast collection of publications from around the world. Users can search for specific titles or explore various categories and genres. Issuu offers a seamless reading experience with its user-friendly interface and allows users to download PDF files for offline reading. Apart from dedicated platforms, search engines also play a crucial role in finding free PDF files. Google, for instance, has an advanced search

feature that allows users to filter results by file type. By specifying the file type as "PDF," users can find websites that offer free PDF downloads on a specific topic. While downloading Aeg Appliance User Guide free PDF files is convenient, its important to note that copyright laws must be respected. Always ensure that the PDF files you download are legally available for free. Many authors and publishers voluntarily provide free PDF versions of their work, but its essential to be cautious and verify the authenticity of the source before downloading Aeg Appliance User Guide. In conclusion, the internet offers numerous platforms and websites that allow users to download free PDF files legally. Whether its classic literature, research papers, or magazines, there is something for everyone. The platforms mentioned in this article, such as Project Gutenberg, Open Library, Academia.edu, and Issuu, provide access to a vast collection of PDF files. However, users should always be cautious and verify the legality of the source before downloading Aeg Appliance User Guide any PDF files. With these platforms, the world of PDF downloads is just a click away.

FAQs About Aeg Appliance User Guide Books

How do I know which eBook platform is the best for me? Finding the best eBook platform depends on your reading preferences and device compatibility. Research different platforms, read user reviews, and explore their features before making a choice. Are free eBooks of good quality? Yes, many reputable platforms offer high-quality free eBooks, including classics and public domain works. However, make sure to verify the source to ensure the eBook credibility. Can I read eBooks without an eReader? Absolutely! Most eBook platforms offer web-based readers or mobile apps that allow you to read eBooks on your computer, tablet, or smartphone. How do I avoid digital eye strain while reading eBooks? To prevent digital eye strain, take regular breaks, adjust the font size and background color, and ensure proper lighting while reading eBooks. What the advantage of interactive eBooks? Interactive eBooks incorporate multimedia elements, quizzes, and activities, enhancing the reader engagement and providing a more immersive learning experience. Aeg Appliance User Guide is one of the best book in our library for free trial. We provide copy of Aeg Appliance User Guide in digital format, so the resources that you find are reliable. There are also many Ebooks of related with Aeg Appliance User Guide. Where to download Aeg Appliance User Guide online for free? Are you looking for Aeg Appliance User Guide PDF? This is definitely going to save you time and cash in something you should think about.

Find Aeg Appliance User Guide :

algebra in 15 minutes a day

algebra and trigonometry by stewart solutions manual
alfa romeo berlina 2000 parts manual
~~algebra 1 final exam answers~~
alfa romeo giulietta spider le vetture che hanno fatto la storia
algebra regents exam june 2013 answers
alessandro manzoni promessi sposi mailand
algebra 1 grade 8 answer key for student test booklet
~~alfa romeo gt manual~~
algebra 1 chapter 12 grab&go file rational expressions & equations prentice hall mathematics
~~alfa romeo 147 selespeed user manual~~
algebra 2 trig final exam review
~~alfa romeo alfetta repair manual~~
~~alfred the great assers life of king alfred other contemporary sources~~
algebra 2 semester 1 apex answers

Aeg Appliance User Guide :

the 10 best ever anxiety management techniques workbook - Feb 05 2023
web the newly updated workbook companion for putting the top anxiety management techniques into practice brimming with exercises worksheets tips and tools this
the 10 best ever anxiety management techniques workbook - Mar 06 2023
web brimming with exercises worksheets tips and tools this how to workbook expands on the top 10 anxiety busting strategies from the 10 best ever anxiety management
the 10 best ever anxiety management techniques workbook - Oct 01 2022
web feb 27 2018 brimming with exercises worksheets tips and tools this complete how to workbook companion expands on the top 10 anxiety busting techniques margaret
the 10 best ever anxiety management techniques workbook - Sep 12 2023
web the newly updated workbook companion for putting the top anxiety management techniques into practice the 10 best ever anxiety management techniques
the 10 best ever anxiety management techniques workbook - Apr 26 2022
web because both the book and workbook are user friendly this is not something that is going to make anxious people more

anxious the 10 best ever anxiety management

the 10 best ever anxiety management techniques workbook - Jul 30 2022

web buy the 10 best ever anxiety management techniques workbook by wehrenberg margaret online on amazon ae at best prices fast and free shipping free returns cash

the 10 best ever anxiety management techniques workbook - Dec 03 2022

web mar 19 2012 the 10 best ever anxiety management techniques workbook kindle edition by wehrenberg margaret download it once and read it on your kindle device

the 10 best ever anxiety management techniques workbook - Apr 07 2023

web brimming with exercises worksheets tips and tools this how to workbook expands on the top 10 anxiety busting strategies from the 10 best ever anxiety management

the 10 best ever anxiety management techniques workbook - Aug 31 2022

web psych central ideal for the non specialist general reader seeking to successfully deal with the enervating disabling devitalizing injurious effects of untreated anxiety the 10 best

the 10 best ever anxiety management techniques workbook - Jan 04 2023

web mar 19 2012 brimming with exercises worksheets tips and tools this how to workbook is the much anticipated companion to wehrenberg s popular the 10 best ever anxiety

the 10 best ever anxiety management techniques workbook - Dec 23 2021

web jul 1 2013 pdf the 10 best ever anxiety management techniques workbook margaret wehrenberg ww norton 2012 13 99 pb 224 pp isbn 9780393707434

the 10 best ever anxiety management techniques workbook - Nov 02 2022

web the 10 best ever anxiety management techniques workbook second edition 2 ebook written by margaret wehrenberg read this book using google play books app

the 10 best ever anxiety management techniques workbook - Oct 13 2023

web feb 27 2018 brimming with exercises worksheets tips and tools this complete how to workbook companion expands on the top 10 anxiety busting techniques margaret

the 10 best ever anxiety management techniques workbook - Jun 28 2022

web jun 30 2008 the 10 best ever anxiety management techniques workbook margaret wehrenberg psy d 3 90 548 ratings45 reviews brimming with exercises worksheets

the 10 best ever anxiety management techniques workbook - May 28 2022

web apr 3 2012 the 10 best ever anxiety management techniques understanding how your brain makes you anxious and

what you can do to change it second 9 99

the 10 best ever anxiety management techniques workbook - Jul 10 2023

web the 10 best ever anxiety management techniques workbook margaret wehrenberg 3 40 15 ratings1 review brimming with exercises worksheets tips and tools this how to

the 10 best ever anxiety management techniques workbook - Mar 26 2022

web assess your stress understanding how your stress level affects anxiety technique 1 change your intake technique 2 breathe technique 3 practice mindfulness

the 10 best ever anxiety management techniques 2nd edition - Feb 22 2022

web jan 30 2018 updated editions of the best selling books on how to understand manage and conquer your anxiety brimming with exercises worksheets tips and tools this

the 10 best ever anxiety management techniques workbook - Jan 24 2022

web the 10 best ever anxiety management techniques workbook is written by margaret wehrenberg and published by w w norton company the digital and etextbook

the 10 best ever anxiety management techniques workbook - Jun 09 2023

web step by step exercises on developing and implementing counter cognitions mindfulness meditation thought stopping and thought replacement breathing minutes demand

the 10 best ever anxiety management techniques workbook - Aug 11 2023

web margaret wehrenberg developed this self help workbook following the publication of the 10 best ever anxiety management techniques in 2008 she takes the ten techniques

the 10 best ever anxiety management techniques workbook - May 08 2023

web feb 27 2018 author credits the newly updated workbook companion for putting the top anxiety management techniques into practice brimming with exercises worksheets

the end of india khushwant singh google books - Jun 05 2023

web apr 6 2013 the end of india by khushwant singh addeddate 2013 04 06 08 37 34 identifier theendofindiabykhushwantsingh identifier ark ark 13960 t77s97v9p ocr

india indus valley harappan decline britannica - Apr 22 2022

web jul 5 2019 and yet on june 7 rahul gandhi publicly announced his decision as president of the congress party i am responsible for the loss of the 2019 election he

the end of india penguin random house india - Oct 09 2023

web the end of india khushwant singh i thought the nation was coming to an end wrote khushwant singh looking back on the

violence of partition that he witnesses over half a

download the end of india by khushwant singh zlib pub - Aug 27 2022

web reviewed in the united states on 20 october 2014 verified purchase an excellent book that covers the rise of religious fundamentalism in india which now seems to be at its

the end of india by khushwant singh archive org - May 04 2023

web when khushwant singh witnessed the violence of partition nearly seventy years ago he believed that he had seen the worst that india could do to herself but after the carnage

the sun sets on airasia india brand simple flying - Sep 15 2021

web 1 hour ago israeli prime minister benjamin netanyahu said his country did not seek to occupy or govern the gaza strip once the war against hamas ends allaying the us s

the end of india kindle edition amazon com - Feb 01 2023

web oct 6 2022 amazon in buy the end of india book online at best prices in india on amazon in read the end of india book reviews author details and more at

the end of india singh khushwant amazon com tr kitap - Jul 06 2023

web oct 25 2017 the end of india khushwant singh penguin uk oct 25 2017 literary collections 176 pages i thought the nation was coming to an end when khushwant

buy the end of india book online at low prices in india the - Oct 29 2022

web the end of india will make for an informative and interesting read for all khushwant singh fans about khushwant singh khushwant singh was an indian journalist and author he

01 the end of india by khushwant singh majid archive org - Mar 02 2023

web the end of india i thought the nation was coming to an end wrote khushwant singh looking back on the violence of partition that he was witness to over half a

the end of india kindle edition amazon in - Apr 03 2023

web sep 25 2017 khushwant sings the end of india is a novel addeddate 2017 09 25 18 05 21 identifier 01theendofindiabykhushwantsingh identifier ark

keeping data in india with ai powered observability operated on - Aug 15 2021

web nov 7 2023 cummins india limited nse cumminsind bse 500480 the board of directors of cummins india limited cil at their meeting held today reviewed and

the end of india amazon in - Sep 08 2023

web jan 1 2003 the end of india by khushwant singh shows the anger of mr singh over the carnage in gujrat india he traces

the history of communalism fundamentalism riots

cummins india limited results for the quarter and period ended - May 12 2021

web 2 days ago the icc 2023 world cup is in its final week with an unbeaten india south africa and most recently australia securing their spots at the semi final stages

the end of india english paperback singh khushwant flipkart - Jul 26 2022

web table of contents india indus valley harappan decline there is no general agreement regarding the causes of the breakdown of harappan urban society broadly speaking

the end of india by khushwant singh z library - Feb 18 2022

web nov 8 2023 for hindus it marks the beginning of the new year and is about the return of deities rama and sita after 14 years of exile the festival is known as bandi chhor divas

200 years on no end to sufferings of hill country tamils in the - Oct 17 2021

web oct 30 2023 vistara plans to launch a handful of new routes next quarter as it approaches the end of its time as a standalone indian airline chief executive officer vinod kannan

the end of india khushwant singh google books - Dec 31 2022

web i thought the nation was coming to an end wrote khushwant singh looking back on the violence of partition that he was witness to over half a century ago he believed then

the end of india madras courier - Nov 29 2022

web i thought the nation was coming to an end wrote khushwant singh looking back on the violence of partition he believed then and for years afterwards that he had seen the

the end of india the economic times - Dec 19 2021

web 2 days ago airasia india s brand has officially ended its managing director has announced air india express will now shoulder all operational responsibilities previously

the end of india s nehru gandhi dynasty the diplomat - Jan 20 2022

web 8 hours ago 200 years on no end to sufferings of hill country tamils in the nilgiris around five lakh tamils of indian origin were sent back to india after the country and sri lanka

the end of india by khushwant singh frontlist in - Mar 22 2022

web sep 28 2023 biggest indian fund manager sees rupee climbing to 80 dollar by 2023 end the currency will probably strengthen to 80 per dollar by the end of the year according

end of india by khushwant singh goodreads - Aug 07 2023

web the end of india singh khushwant amazon com tr kitap Çerez tercihlerinizi seçin Çerez bildirimimizde ayrıntılı şekilde

açıklandığı üzere alışveriş yapmanızı sağlamak
buy end of india book online at low prices in india end of - Jan 08 2021

india s bank of baroda ends employment of key official after - Apr 10 2021
web buy end of india book online at low prices in india end of india reviews ratings amazon in books history region countries buy new 177 00 m r p 225 00
israel hamas war live updates israel doesn t seek to india - Jun 12 2021
web 15 hours ago the indira gandhi national open university ignou has released the hall tickets for the ignou term end examination tee december 2023 the exams will be
ignou tee december 2023 hall ticket released on ignou - Mar 10 2021

who will india face in the semi final of world cup 2023 msn - Feb 06 2021

the end of india khushwant singh google books - Sep 27 2022
web dec 19 2019 news world imran shares prophetic excerpt of khushwant singh s the end of india social media users have shared excerpts from the end of india over the caa
diwali 2023 what you need to know about the festival of light - Nov 17 2021
web nov 7 2023 as of october 2023 the dynatrace platform is available on aws in mumbai enabling customers to maintain a local saas presence in india this means that
india s vistara plans new routes after inaugural hong kong flight - Jul 14 2021
web nov 5 2023 mumbai nov 5 reuters india s bank of baroda said on saturday it had terminated the employment of its chief digital officer as part of action after the central
imran shares prophetic excerpt of khushwant singh s the end - Jun 24 2022
web overview i thought the nation was coming to an end wrote khushwant singh looking back on the violence of partition that he was witness to over half a century ago he believed
the end of india amazon in books - May 24 2022
web discover the end of india book written by khushwant singh explore the end of india in z library and find free summary reviews read online quotes related books ebook
dialysis technician exam study guide flashcards quizlet - Oct 26 2022
web study with quizlet and memorize flashcards containing terms like what foods are high in phosphorus what foods are high

in potassium what are the two hemodialysis delivery systems and more

ccht practice test updated 2023 ccht exam review - Jul 03 2023

web jul 20 2023 the questions are split into three cogito levels knowledge k comprehension c and application a knowledge 8 13 these questions represent designed in tension like well a technician can recall specific facts common terms fundamental ideas and principle

self tests for the 6 edition core curriculum for the dialysis mei - Mar 31 2023

web mar 20 2018 self tests for the 6th edition core curriculum for the dialysis technician are now available madison wisconsin practice self tests for the new core curriculum for the dialysis technician are now online at mei org cc6 the questions are intended to help students prepare for patient care employment or for the

certified hemodialysis technologist exam mometrix test - Feb 27 2023

web oct 22 2023 the questions in this domain assess your ability to do the following maintain a clean and safe patient environment use dialysis precautions implement isolation procedures v education and professional development 10

300 top dialysis technician mcqs and answers quiz test - May 21 2022

web dialysis technician multiple choice questions 1 which of following is not part of nephron a glomerulus b proximal convoluted tubule c middle convoluted tubule d distal convoluted tubule 2 which hormone is secreted by kidney a renin b aldosterone c thyroxine d growth hormone 3 what is normal gfr in adult humans a 90 ml minute

ccht preparation guide nephrology nursing certification - May 01 2023

web test questions to be certain that the test content is accurate all questions are supported using the core curriculum for the dialysis technician the regulations in the cms conditions for coverage for end stage renal disease facilities and other references the test consists of 150 questions that match the test blueprint

practice test cht bonent - Jun 02 2023

web it has a length of 50 questions whereas the official cht exam has 150 questions the online practice exam is intended to reflect the knowledge required of a hemodialysis

dialysis practice questions flashcards quizlet - Jun 21 2022

web dialysis practice questions 5 0 3 reviews the nephron is located mostly in the cortex or the kidney true or false click the card to flip true click the card to flip 1 303 flashcards learn q chat created by rachel aguirre students also viewed davita star learning 92 terms martine israel preview patient and data assessment 10 terms

core curriculum for the dialysis technician 6th edition - Nov 26 2022

web core curriculum for the dialysis technician 6th edition test your knowledge and prepare for the certification exam buy individual quiz questions or buy the bundle 700 questions in total free sample self test questions 10 questions module module

1 module 2 module 3 module 4 module 5

ccht practice test updated 2023 ccht exam review - Oct 06 2023

web nov 2 2023 ccht study guide ccht flashcards what is a ccht certified clinical hemodialysis technicians are specialized professionals also referred to as dialysis technicians who are skilled in setting up and using a hemodialysis machine to administer dialysis therapy to patients

free online ccht practice test 2023 tests questions com - Sep 05 2023

web free ccht exam questions to pass ccht questions for ccht test you must go through real exam for that we provide ccht exam practice questions 2023 real test we discuss in these practice test for ccht exam from different topics like ccht practice exam and study guide dialysis technician 2023 ccht exam practice questions in this test

core curriculum for the dialysis technician quiz bundle proprofs - Apr 19 2022

web this bundle contains all 701 core curriculum for the dialysis technician quiz questions each time you take this quiz you will get 150 randomized questions to answer you can take this quiz as many times as you want and get different quiz questions you will have unlimited access to this quiz for 90 days from the date of purchase

certified hemodialysis technician exam practice questions cht - Jan 29 2023

web biocompatible membranes sophisticated alarms and automatic functions characterize the modern dialyzer 0 15 answer d dialysis machines have evolved since their initial frequent use in the

dialysis technician exam questions and answers iibr org - Feb 15 2022

web ccht practice test the certified clinical hemodialysis technician ccht certification exam delivered by the nephrology nursing certification commission

dialysis technician mock test series youth4work - Aug 24 2022

web looking for dialysis technician questions that are asked in hssc healthcare sector skill council exam go to youth4work com and practice unlimited dialysis technician questions and much more to boost your dialysis technician preparation

dialysis tech practice test flashcards quizlet - Aug 04 2023

web study with quizlet and memorize flashcards containing terms like peritoneal dialysis pd differs from hemodialysis in which of the following ways a

dialysis technician exam study material prometric mcq databank - Jul 23 2022

web avail dialysis technician mcq prometric questions answer to prepare medical exams get latest study material to get prepared uae kuwait qatar medical exam

dialysis exam questions practice test udemy - Sep 24 2022

web there are two main types of dialysis hemodialysis and peritoneal dialysis hemodialysis uses a machine to clean the blood

outside of the body while peritoneal dialysis uses the lining of the abdomen to filter waste products from the bloodstream

dialysis technician exam flashcards quizlet - Mar 19 2022

web created by geoluiarm3 core curriculum for dialysis technician terms in this set 50 infection is the second most common cause of death in hd patient infection can occur when pathogens enter the body through a break in the skin a mucous membrane the lungs 3 main ways disease can spread 1 direct contact 2 indirect contact 3 droplet spread

ccht nephrology nursing certification commission - Dec 28 2022

web the ccht exam contains 150 questions and must be completed in three 3 hours you must receive a standard score of 95 to pass the examination this is achieved by answering 74 of the test questions correctly